White Paper

10 /40 /100Gb/s transmission links are typically shared by a vast number of application and users.

EXECUTING HIGHLY ACCURATE FIBER MEASUREMENTS IN A FRACTION OF THE TIME

Claiming that they are most of the time mission critical and that failures are costly will find agreement within the industry.

They require caution from the stage of planning, selection of material, installation all the way to the operational phase.

In order to support an effort to use best practices, the Standards Organizations like ISO, TIA and EN have defined the following multi-tier certification process that not only certifies compliance with cabling standards but also optimizes the installation quality by identifying and eliminating unnecessary bottlenecks:

- Tier 1 / BASIC Test Regime uses a light source and power meter (LSPM) or an automated Optical Loss Test Set (OLTS).
- Tier 2 / EXTENDED Test Regime uses an Optical Time Domain Reflectometer (OTDR).

Tier 2 does not replace Tier 1. It actually complements it due to a very simple reason: Tier 2 is more detailed but less accurate then Tier 1. At first this might sound like an Oxymoron but it is caused by fundamental technical principles, true for OTDRs from the past and future models. Unfortunately in the real world the problem is even bigger and the discussion on whether or not OTDRs are the right tools to test new installations for compliance is fuelled by common practices that try to balance simplicity with achieving relevant test results. This paper describes new methods and procedures that deliver highly accurate and repeatable results and, at the same time, significantly reduce the overall testing time.

We will now take a step back and describe various OTDR test scenarios as they typical occur today.

OTDR's Have A Point View

Measuring the loss of individual events, such as connectors and splices, as well as the overall link loss unfortunately depends on the direction from which the measurement is made. Even though not a term found on Wikipedia we will call this "Directivity".

"Directivity" results from differences in diameter, backscatter, numerical aperture and index of refraction of the link under test as well as the launch and tail fiber. In order to get to the correct loss values we need to average the results from the two measurements that were performed from End 1 and End 2, see Figure 1.

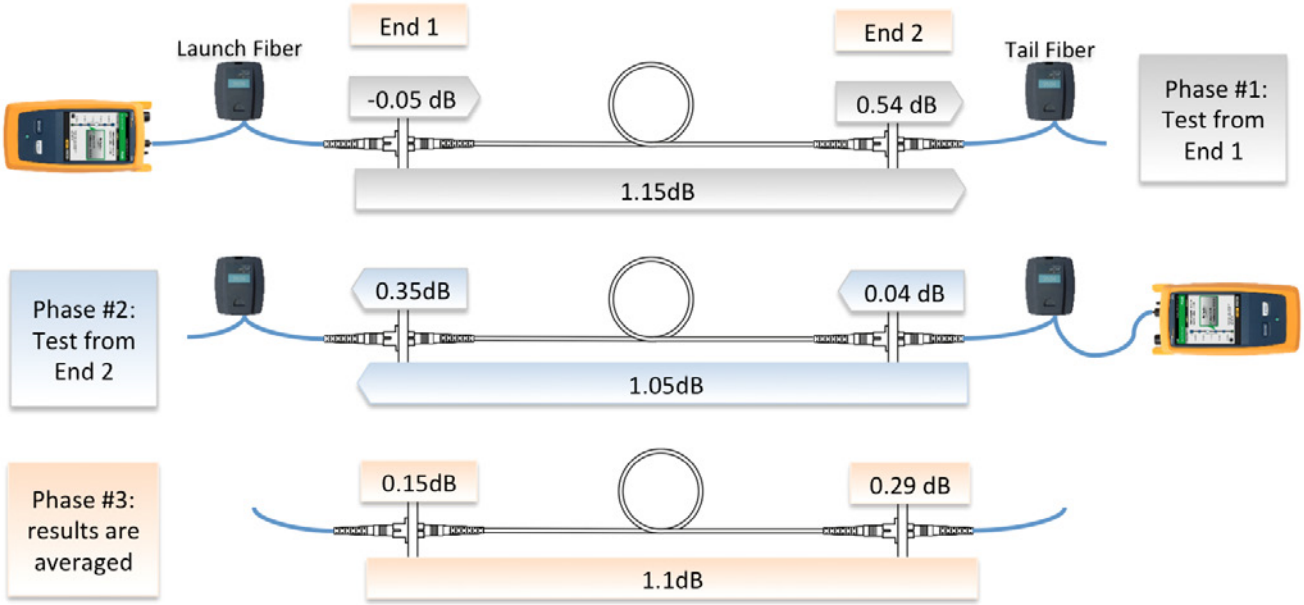

Example: Left Connection. We need to average -0.05 dB and 0.35 dB which results in a true loss of 0.15 dB.

A Reality Check

While the above method delivers the ultimate accuracy for OTDR-based loss testing it does come at a price. It requires a 2-step measurement process and an additional resource at the far end who moves the tail fiber to the next port when testing from patch panel to patch panel. Since this type of testing is very time consuming, installers are tempted to take a short cut and test without the use of a tail fiber.

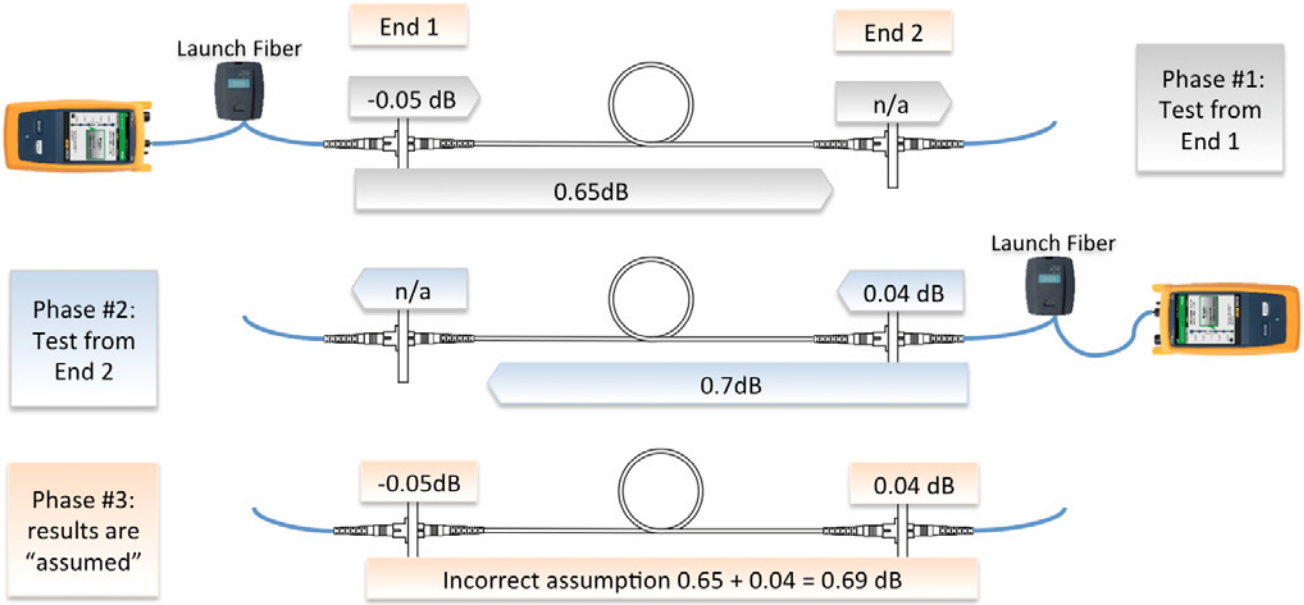

Figure 2: Bi-Directional Test without a Tail Fiber

It is an often-defended misconception that an overall loss reading can be obtained by adding the loss of the connection at End 2 (0.04 dB) obtained in Phase #2 to the incomplete over all loss reading from Phase #1 (0.65 dB), see Figure 2.

Test Configuration	Conn. #1	Conn. #2	Overall
Launch & Tail Fiber	0.15	0.29	1.14
Launch fiber only	-0.05	0.04	0.69
Error	133%	86%	39%

Table 1: Error Analysis Testing without a Tail Fiber

A quick analysis as shown in Table 1 highlights the significant errors that occur in this real-world example. The errors made are of such magnitude that one can conclude that any bi-directional measurements made without tail fibers are meaningless.

OTDR Testing With A LOOP

The above dilemma is not a surprise to experts and a procedure named "Looped OTDR testing" was developed and has been specified in some projects, mainly in Germany.

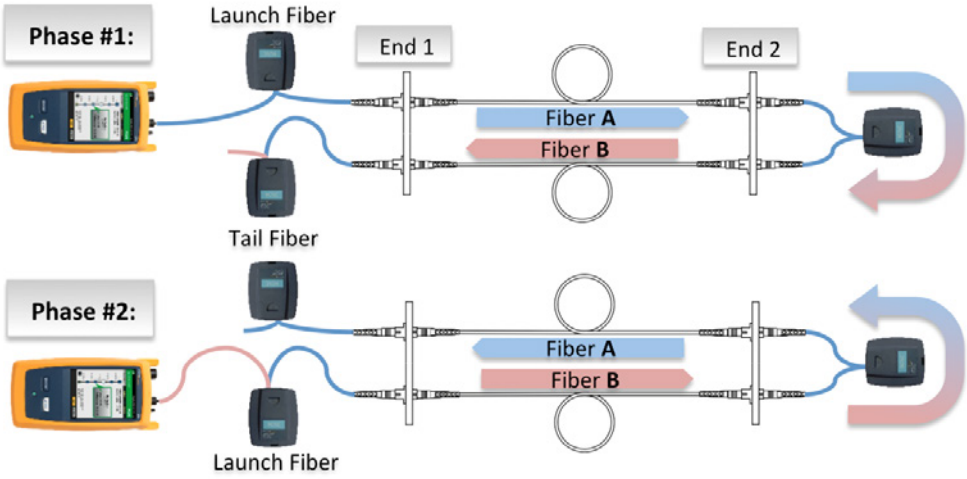

Figure 3: OTDR Test with a LOOP

By using a loop at the remote end, which has a length similar to a launch or tail fiber, the two fibers of a duplex link – Fiber A and Fiber B – can be tested in one shot and phase two of a bi-directional test can now be performed without moving the OTDR to the other end. The only disadvantage of this loop-based test using a traditional OTDR is that it requires extensive manipulation by the user to extract the individual link specific data after the traces are obtained.

Issue	Pro's & Con's		Manual Loop	Automatic Smart Loop
1	+	Reduces Testing time by 50%	✓	✓
2	+	No need to walk OTDR to the other end	✓	✓
3	+	Lifetime of Launch & Tail Fibers gets doubled because after single mating two links are tested in both directions and the wear and tear is spread to both end of the of Launch & Tail Fibers	✓	✓
4	+	Allows bi-directional test in case of restricted or dangerous access to one of the two ends (GSM Towers, Wind Towers, Elevated Stations in factories, Highly secure Data Center Zones, etc.	✓	✓
5	–	Time consuming post process to: Identify A and B segment and create two distinct records	✓	
6	–	Manual post processing by the user inherits the risk of error	✓	
7	–	Difficult handling of APC connectors with near zero insertion loss	✓	
8	+	The fiber segment A and B is identified automatically and saved as two records		✓
9	+	No additional source of error due to manual cursor setting		✓
10	+	Automatic handling of "Zero'ed" APC connections		✓
11	+	On screen wizard assists user in the correct execution of the bi-directional testing process		✓
12	+	Automatic assistance check for the presence of Launch-, Loop- and Tail-Fibers		✓

Table 2: Pro's & Con's of OTDR testing with a loop fiber

Testing with a "SmartLoop Assistant"

An OTDR with a built-in "SmartLoop" Assistant can convert the very cumbersome and error prone manual loop process into an automatic test whilst maintaining all the advantages of a loop-based OTDR testing process. Table 2 compares the "Pro's and Con's" of Manual and SmartLoop Testing.

Experts agree that in 90% of cases technicians take the launch fiber together with the OTDR to the other end of the link when they perform a bi-directional test. This is fundamentally wrong and defeats the purpose and benefit of performing a bi-directional test. Both the launch and tail fibers used in bi-directional tests, must stay in place during tests in both directions. Figure 4 shows how the animated screens of the SmartLoop-Assistant help prevent this common mistake.

OTDRs are often operated by novice users and the SmartLoop Assistant will ensure that no incomplete traces are taken. This eliminates the need to go back on-site to re-take a trace.

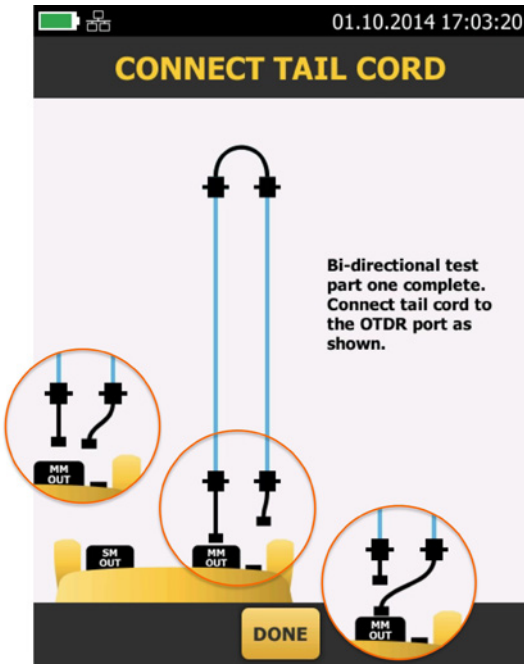

Figure 4: The SmartLoop Assistant helps to prevent common mistakes made in the area of bi-directional testing.

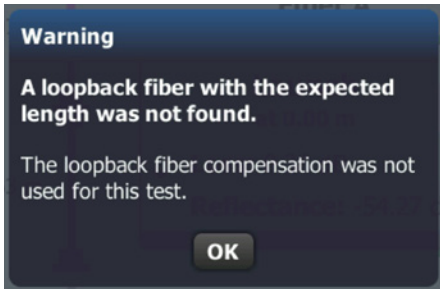

In Figure 5 we see that the SmartLoop Assistant checked for the presence of a Launch-, Loop- and Tail Fiber, as well as that Fiber A and B are in the right order and that they have the expected length.

Figure 5: The SmartLoop Assistant warns the user when not all expected elements are found.

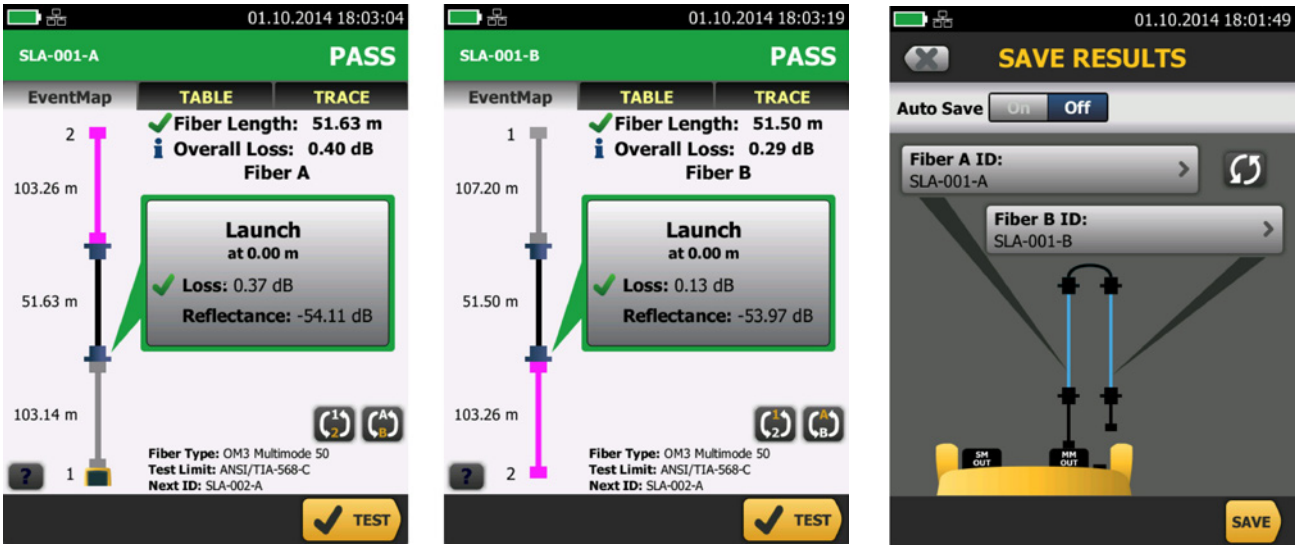

Figure 6: Four test records are produced and names for the link IDs suggested.

After finding all the expected elements the SmartLoop Assistant generates 4 test records for the two fiber links A and B, including the measurements made from End 1 as well as End 2. The final step for the operator is to accept the suggested naming and all is ready for the results management software to report the bi-directional averages, see Figure 6.

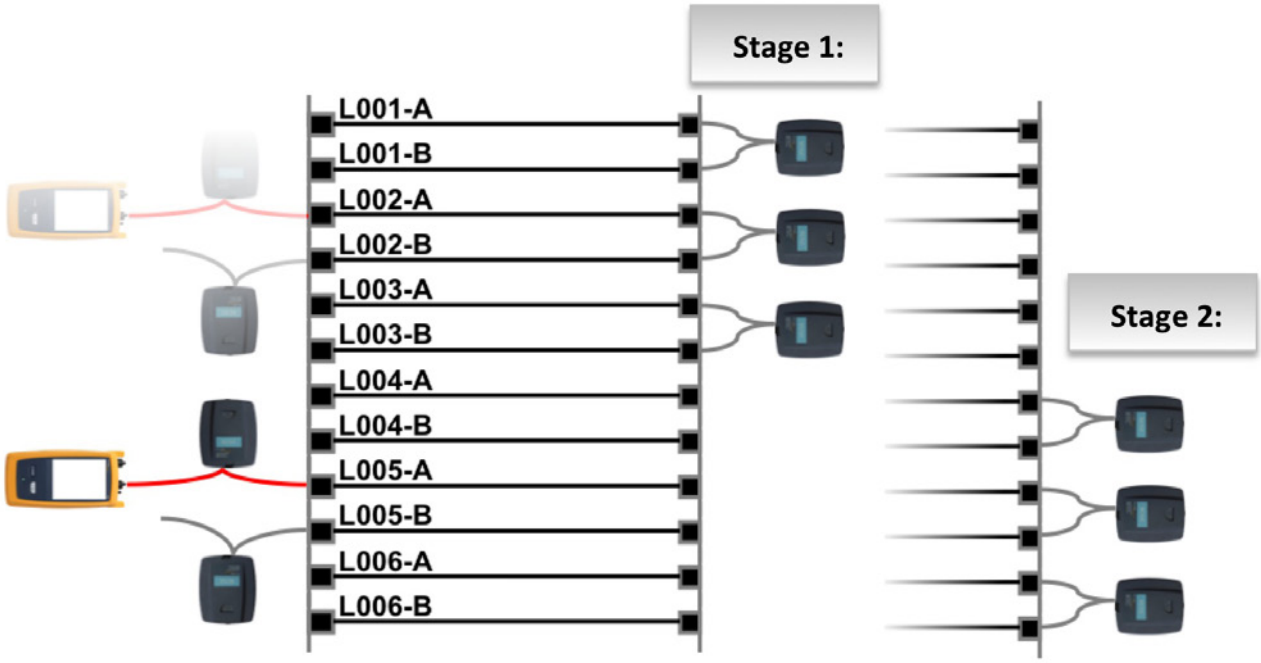

Figure 7: Multiple loops allows a single technician to perform a set of bi-directional tests before walking to the other end or call for assistance.

The efficiency of the SmartLoop Concept also encourages users to deploy multiple loop fibers simultaneously to allow a single technician to work with even greater efficiency without an assistant. As illustrated in Figure 7, six loop fibres would enable the bi-directional test of a dozen fibers before making it necessary for the operator to walk over to the other end to move them or to call somebody for assistance. While this may initially look as an increased operational cost, in reality this is not the case. Launch, tail and loop fibers are "consumables" that have a finite lifetime and using multiple loop fibers just means spreading the wear and tear.

Summary

With growing pressures on profitability, installers and contractors want to get the job done quicker and above all "right first time". This requires innovative testing capabilities like the automatic SmartLoop, to simplify tasks and reduce the time spent testing. Not only does it cut test time by at least 50%, it also greatly eliminates the need to have an additional technician permanently stationed at the far end when performing bi-directional OTDR tests, and last but not least it helps to prevent the most common but fundamental mistakes.

CertiFiber® Pro - Accelerates every step of the fiber certification process

The CertiFiber Pro improves the efficiency of fiber certification with a 3 second, dual wavelength, dual fiber, test time. The Taptive user interface simplifies set-up, eliminates errors and speeds troubleshooting. A set reference wizard ensures correct reference setting and eliminates negative loss errors. Built on the future-ready Versiv platform, CertiFiber Pro provides merged Tier 1 (Basic) / Tier 2 (Extended) testing and reporting when paired with OptiFiber Pro module. A convenient quad module supports both singlemode and multimode and is multimode Encircled Flux compliant. Copper certification and Wi-Fi Analysis and Ethernet troubleshooting modules are also available. Analyze test results and create professional test reports using LinkWare Management Software.

DSX-5000 CableAnalyzer™ - Accelerates every step of the copper certification process

The DSX-5000 CableAnalyzer improves the efficiency of copper certification with unmatched speed for testing Cat 6A and Class FA while meeting darft IEC Level V – the most stringent accuracy requirement. The ProjX Management System helps ensure jobs are done correctly the first time and helps tracks progress from set-up to systems acceptance. Versiv platform supports modules for fiber testing (Both OLTS and OTDR) and Wi-Fi Analysis and Ethernet troubleshooting. The platform is easily upgradeable to support future standards. Troubleshoot faults faster with the Taptive user interface which graphically displays the source of failures including crosstalk, return loss and shield faults. Analyze test results and create professional test reports using LinkWare™ Management Software.

OptiFiber® Pro OTDR – Built for the Enterprise

OptiFiber Pro is the industry's first OTDR built from the ground up to meet the challenges of enterprise fiber infrastructures. This troubleshooting and certification tool combines uncomplicated power, unparalleled efficiency and the exact functions needed for troubleshooting campus, data center and storage fiber networks.

The OptiFiber Pro OTDR elevates fiber testing with the industry's only smartphone interface that turns a technician into a fiber expert. The DataCenter OTDR configuration eliminates uncertainty and errors that occur when testing data center fiber. Its ultra-short dead zones enable testing of fiber patchcords in virtualized data centers. These capabilities, plus the fastest-in-the-industry trace times, make the OptiFiber Pro OTDR a must-have tool.

FI-7000 FiberInspector™ Pro - 2-second automated PASS/FAIL certification of fiber end-faces

Graphical indication of problem areas due to contamination, pits, chips, and scratches.

Certify to industry standards - IEC 61300-3-35 and eliminate human subjectivity from end-face measurements.

More information at: ***www.flukenetworks.com/content/versiv***

Fluke Networks operates in more than 50 countries worldwide. To find your local office contact details, go to **www.flukenetworks.com/contact**

Corporate Office:
Fluke Networks
P.O. Box 777 Everett, WA USA 98206-0777
1-800-283-5853
e-mail: **info@flukenetworks.com**

European Office:
Fluke Networks
P.O. Box 1550, 5602 BN Eindhoven
Germany **0049-(0)682 2222 0223**
France **0033-(0)1780 0023**
UK **0044-(0)207 942 0721**
e-mail: **sales.core@flukenetworks.com**